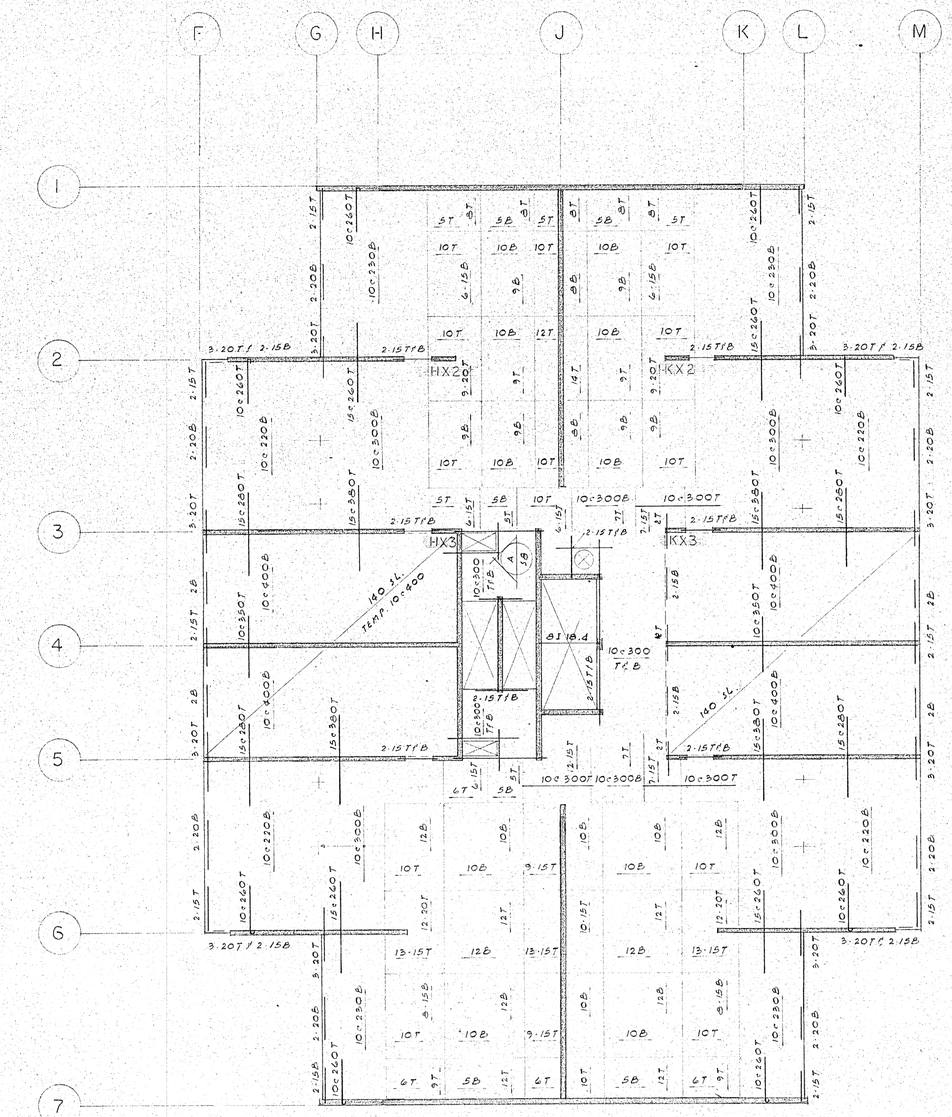

TYPICAL FLOOR FRAMING PLAN

1:100

1. CONCRETE SLAB TO BE 180 THICK UNLESS NOTED. TEMP 10c330
2. CONCRETE TO HAVE A COMPRESSIVE STRENGTH OF 3500 P.S.I. GRADE AT 28 DAYS.
3. REINFORCING STEEL TO HAVE A YIELD STRENGTH OF 60,000 P.S.I.
4. ALL REINFORCING STEEL TO BE 10M BARS UNLESS NOTED.
5. REINFORCING STEEL IN N-S & E-W DIRECTION TO BE PLACED CLOSEST TO TOP AND BOTTOM SURFACES OF CONCRETE.
6. AT LEAST 50% OF TOP STEEL IN COLUMN STRIP TO BE PLACED DIRECTLY OVER COLUMN WITHIN A WIDTH EQUAL TO COLUMN WIDTH + 10' EITHER SIDE OF COLUMN.
7. MAXIMUM SPACING OF REINFORCING BARS TO BE
8. ULTIMATE STRENGTH DESIGN HAS BEEN USED.
9. SEE GENERAL NOTES AND TYPICAL DETAILS ON DRAWING S-10

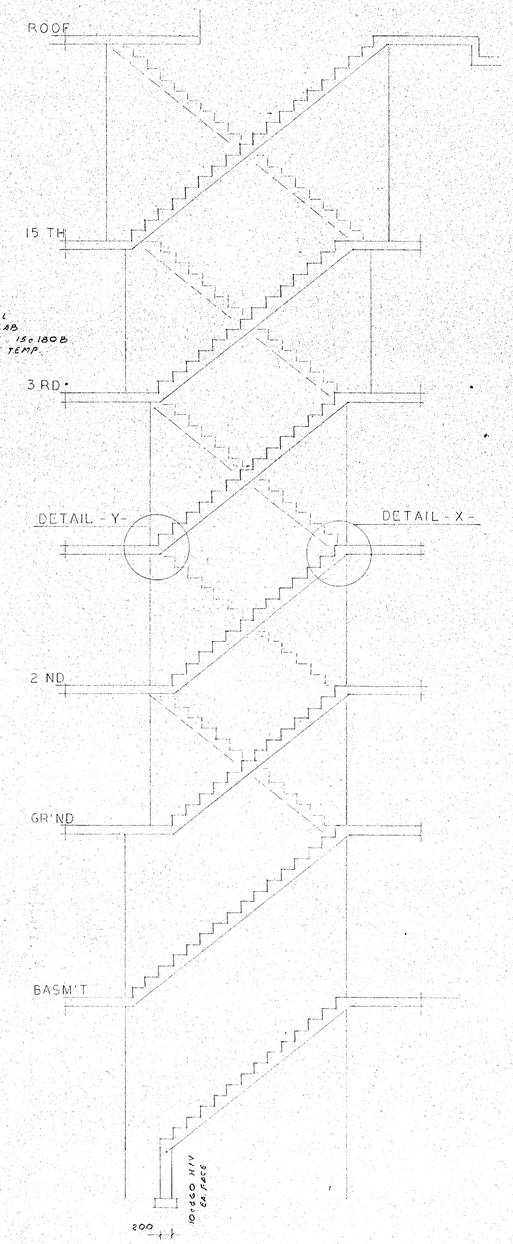

TYPICAL STAIR SECTION A S8

1:50

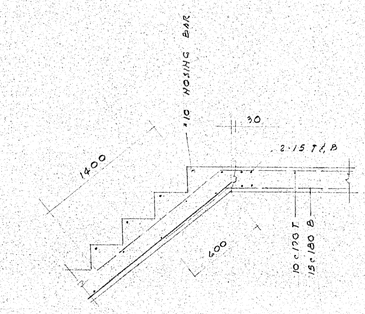

DETAIL - X -

1:20

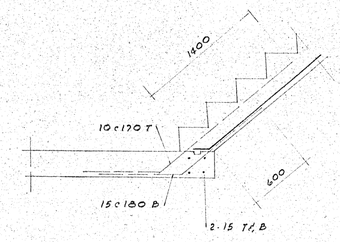

DETAIL - Y -

REVISIONS		
DATE	No.	NOTATION
JUN 9		1ST ISSUE

D. W. LAW
REGISTERED PROFESSIONAL ENGINEER
7934

D. LAW CONSULTANTS LIMITED
CONSULTING STRUCTURAL ENGINEERS
30 SCARSDALE RD. – DON MILLS, ONT.

JOB NAME: COMMERCIAL & APT. PROJ
STASH INVEST. INC.
254 JARVIS ST TORONTO

SHEET TITLE	SHEET No.
TYPICAL FLOOR	S 8

ARCHITECT	SCALE	DATE
E.I. RICHMOND	DRAWN BY	CHECKED BY